PROJECT REFERENCE NO.	SHEET NO.
SS-4905BI	2-B

*NOTE: SEE STD. DWG. 846.01
FOR GENERAL NOTES

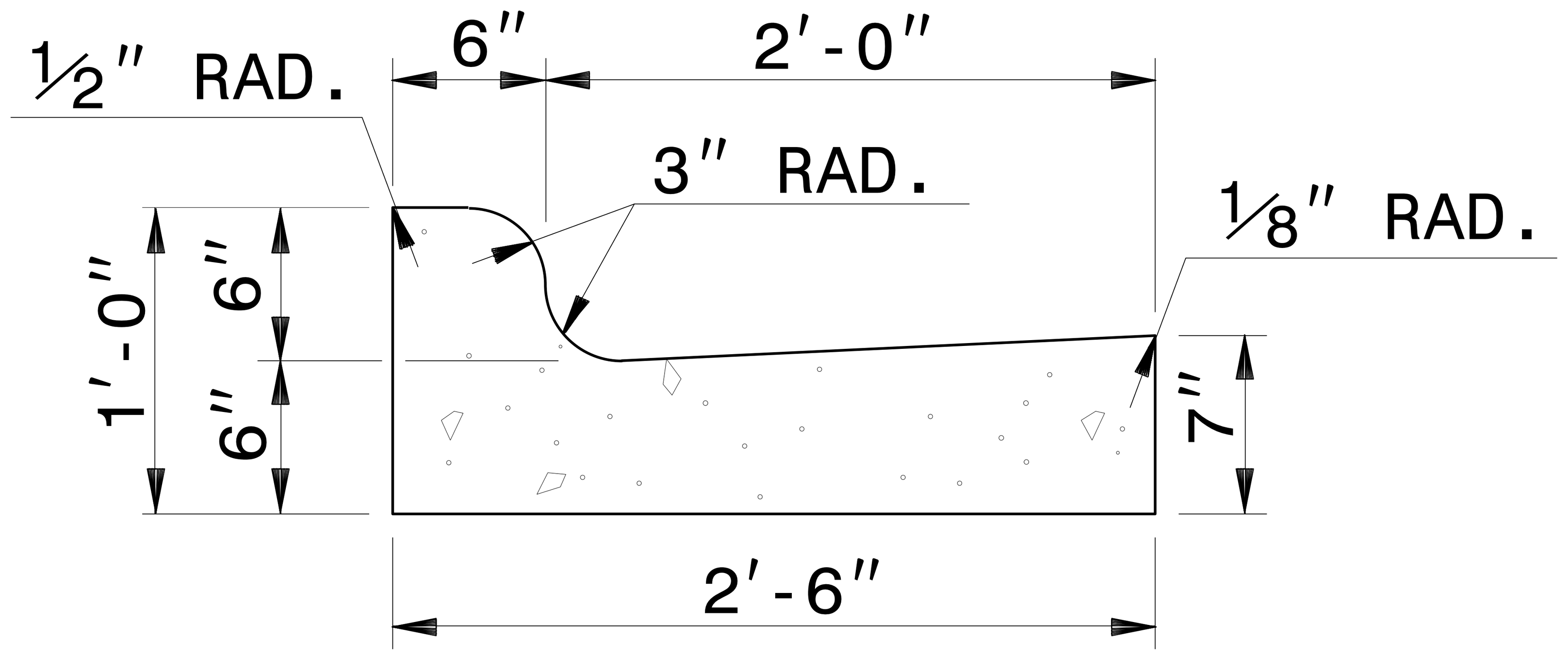

2′-6″ CURB AND GUTTER

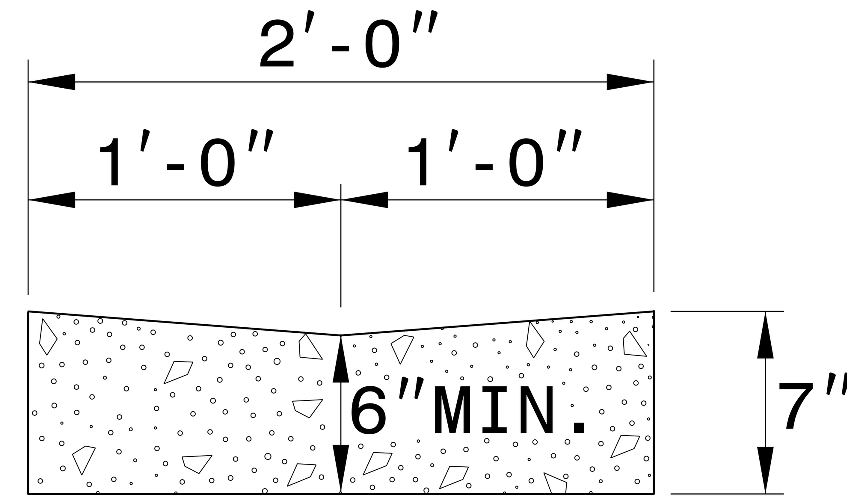

VALLEY GUTTER

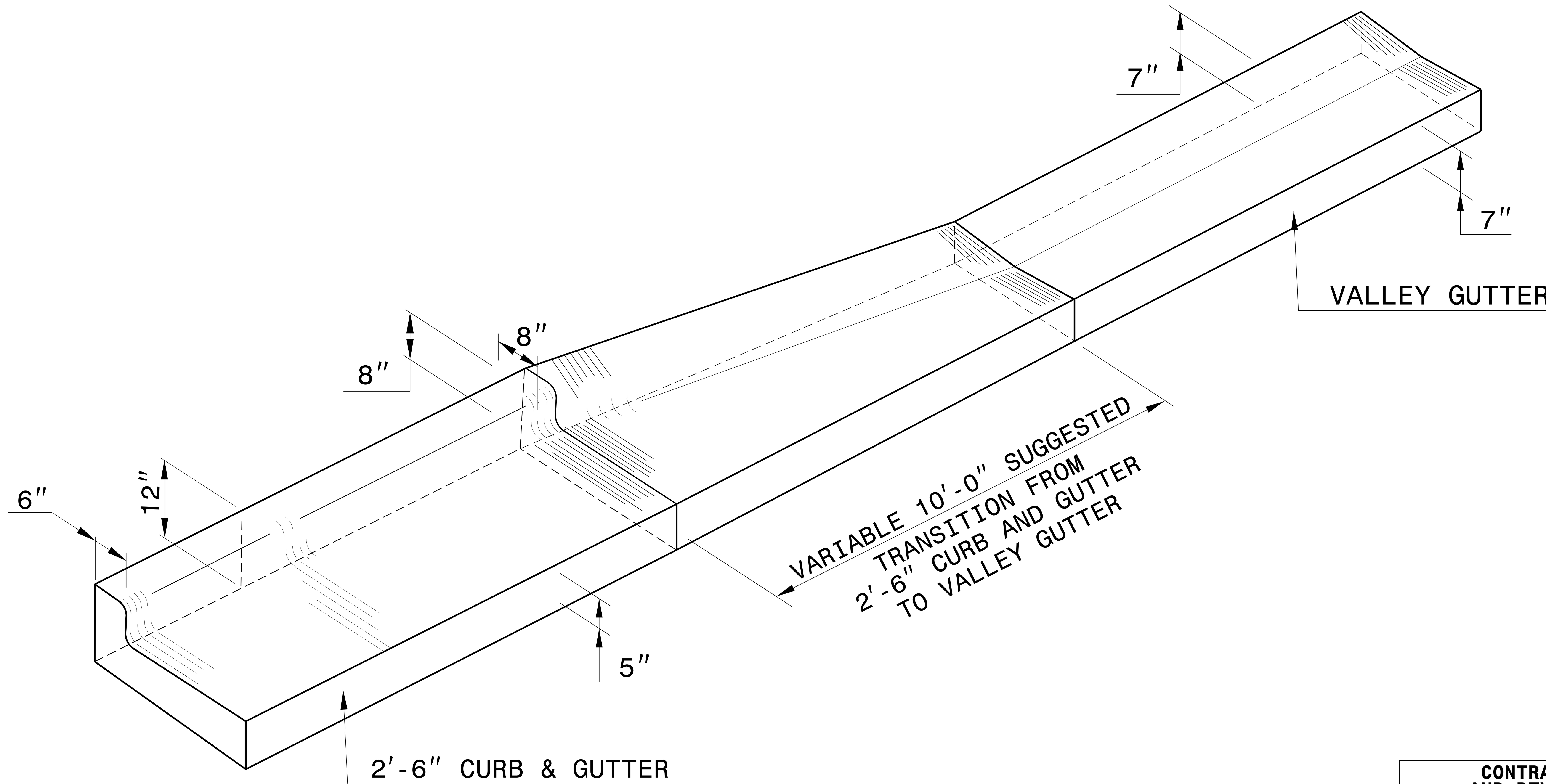

ISOMETRIC VIEW OF TRANSITION

CONTRACT STANDARDS AND DEVELOPMENT UNIT
Office 919-707-6950 FAX 919-250-4119

TRANSITION FROM 2′-6″ CURB AND GUTTER TO VALLEY GUTTER

ORIGINAL BY: T.S.SPELL DATE: FEB.4,2009
MODIFIED BY: DATE:
CHECKED BY: DATE:
FILE SPEC.: w:usr/details/stand/cgtransit.dgn