CH ENGINEERING
3220 GLEN ROYAL RD. RALEIGH, NC 27617
TELE 919.788.0224 FAX 919.788.0232
NC LICENSE #P-0189

PROJECT REFERENCE NO.	SHEET NO.
	UC-3
PROJECT	SS-4905BI

UTILITY ENGINEER

NORTH CAROLINA PROFESSIONAL SEAL 028912 ENGINEER ERIC M. TWEED
8-27-14

CITY OF DURHAM
PUBLIC WORKS DEPARTMENT
APPROVED
ENGINEERING JDW DATE 9/9/14
STORM WATER _____ DATE _____
TRANSPORTATION _____ DATE _____

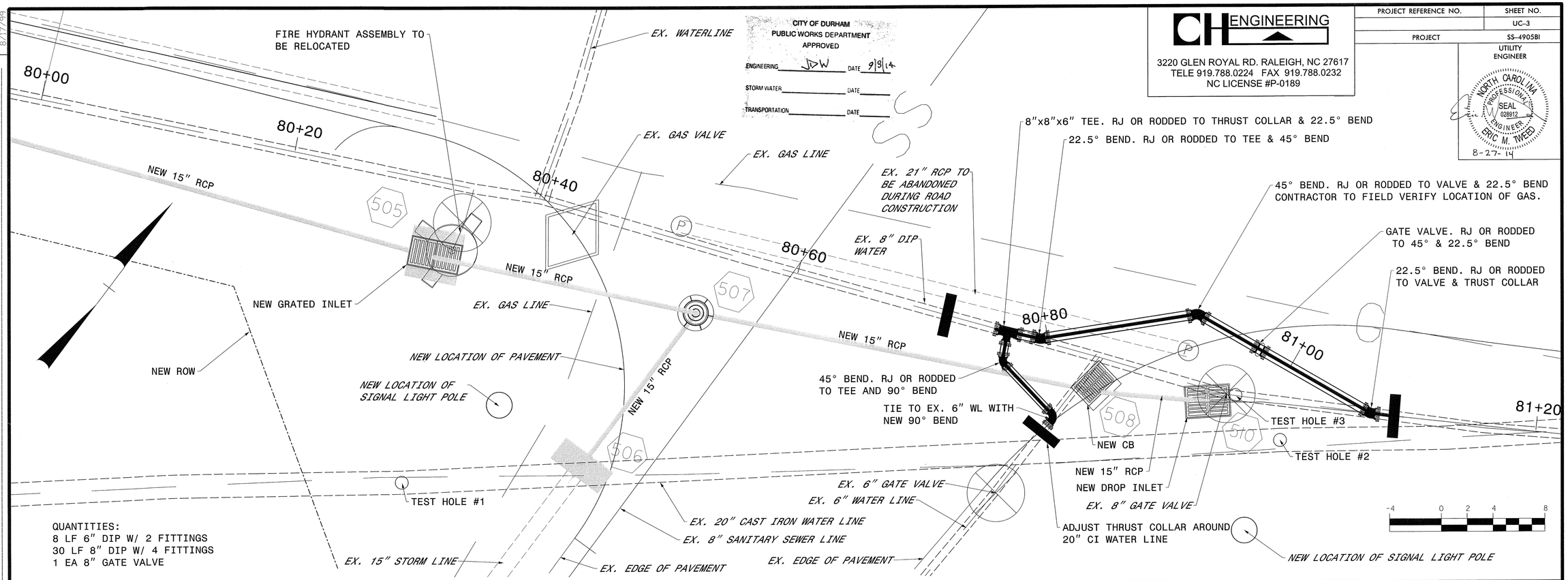

QUANTITIES:
8 LF 6" DIP W/ 2 FITTINGS
30 LF 8" DIP W/ 4 FITTINGS
1 EA 8" GATE VALVE

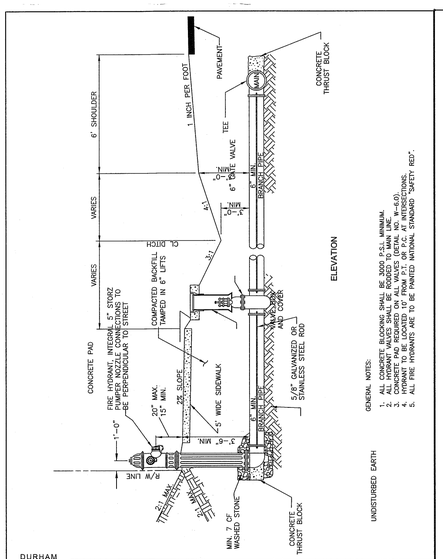

DURHAM 1869 CITY OF INNOVATION

REVISION DATE: 09/24/10	FIRE HYDRANT INSTALLATION STRIP PAVEMENT WITH DITCH CITY OF DURHAM, NORTH CAROLINA DEPARTMENT OF PUBLIC WORKS	SCALE: NTS DETAIL NO. W-2.2

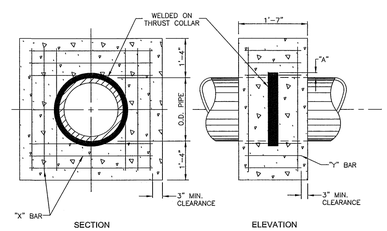

WELDED ON THRUST COLLAR	
I.D. PIPE	"A"
6"–16"	2"
20"–24"	3"
30"–36"	4"

THRUST COLLAR REINFORCING		
	"X" BAR	"Y" BAR
BAR LENGTH	2'-2" + O.D. PIPE	1'-1"
REBAR SIZE	#5	#5
NUMBER REQ'D	24	12

NOTES:
1. CONCRETE SHALL BE 3000 P.S.I
2. REINFORCING BARS SHALL BE DEFORMED, AND TIED TOGETHER.
3. BACKFILL TAMPED IN 6" LAYERS
4. TRENCH BOTTOM WIDTH IN VICINITY OF THRUST BLOCK(S) INSTALLATION SHALL BE THE MINIMUM WIDTH AS DESCRIBED BY THE ENGINEER.

DURHAM 1869 CITY OF INNOVATION

REVISION DATE: 12/07/2009	CONCRETE THRUST BLOCK CITY OF DURHAM, NORTH CAROLINA DEPARTMENT OF PUBLIC WORKS	SCALE: NTS DETAIL NO. W-8.1

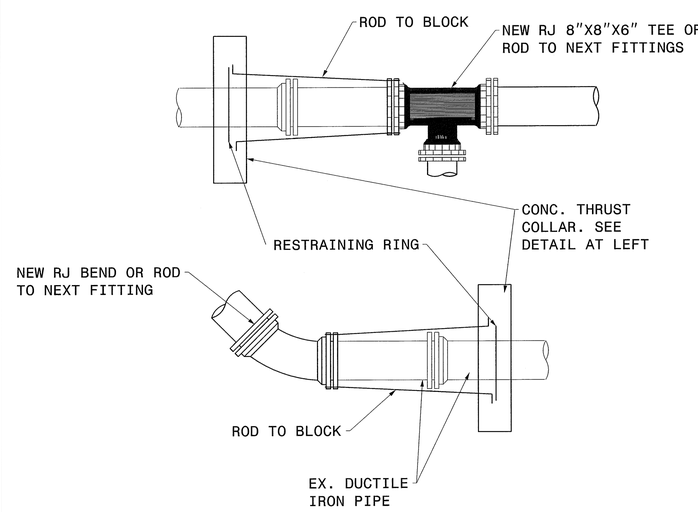

RODS SHALL BE SAME Ø AS BOLTS SUPPLIED WITH THE BEND.

PIPE CONNECTION DETAIL

NOTE:
SEE CITY OF DURHAM STANDARD CONSTRUCTION DETAILS FOR TRENCHES AND PIPE BEDDING.

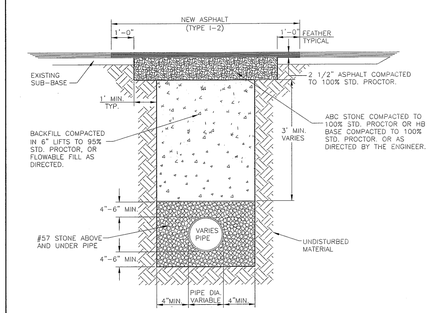

FLOWABLE FILL TRENCH-CUT STREET, WATER, SEWER AND STORMWATER

DURHAM 1869 CITY OF INNOVATION

REVISION DATE: 12/07/2009	TRENCH CUT INSTALLATION CITY OF DURHAM, NORTH CAROLINA DEPARTMENT OF PUBLIC WORKS	SCALE: NTS DETAIL NO. SS-8.0

REVISIONS

8/17/99